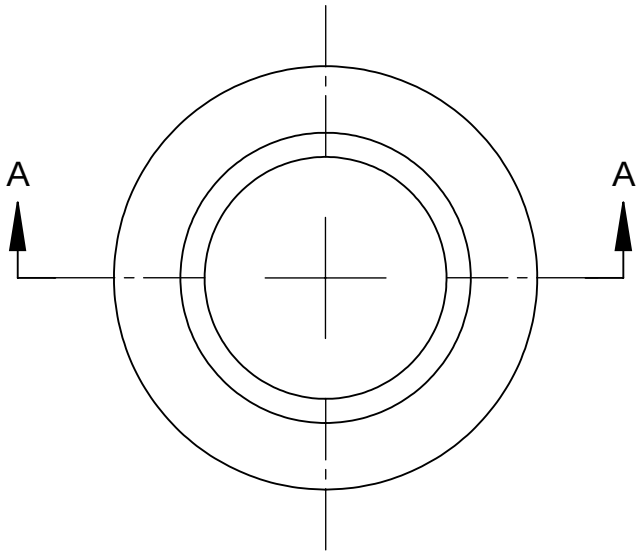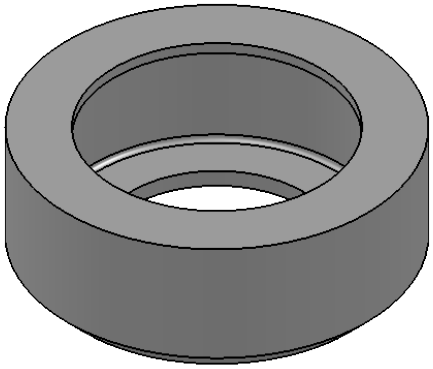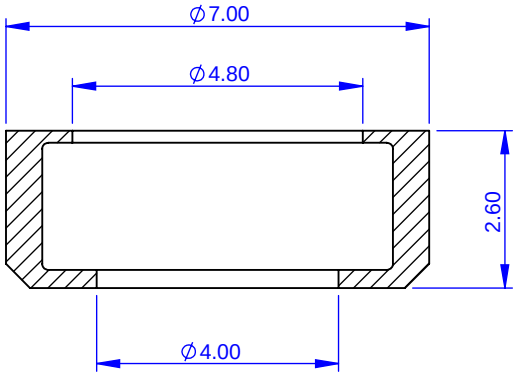RoHS Compliant